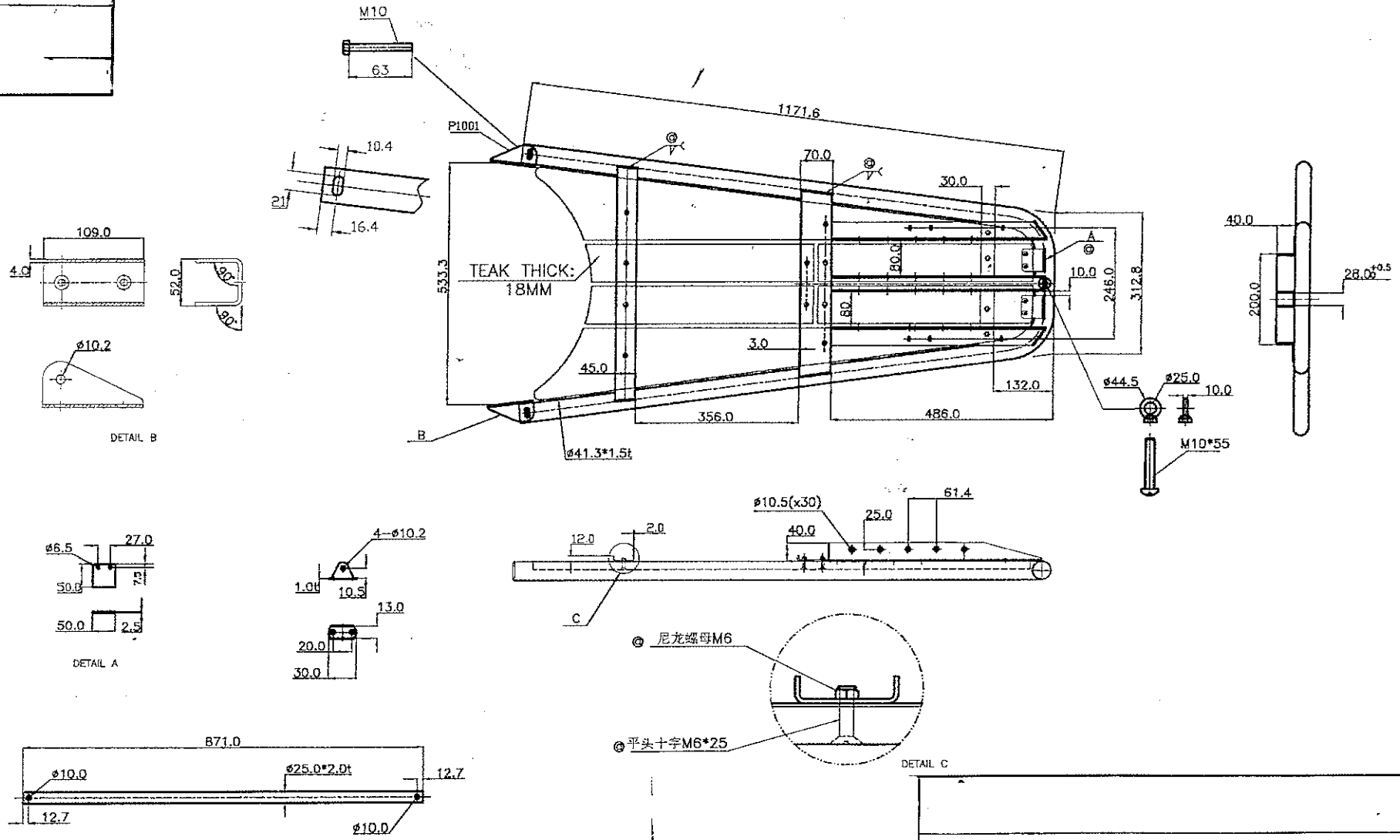

Ecn	Revisions	Description	Date	Revised
				B.L

Checked:	Date:	M'TL: SUS316	Scale:
Approved:	Date:	Weight: g	Dimensions: M/M
Projection: A4H		Finish:	SHEET OF

48.472.03