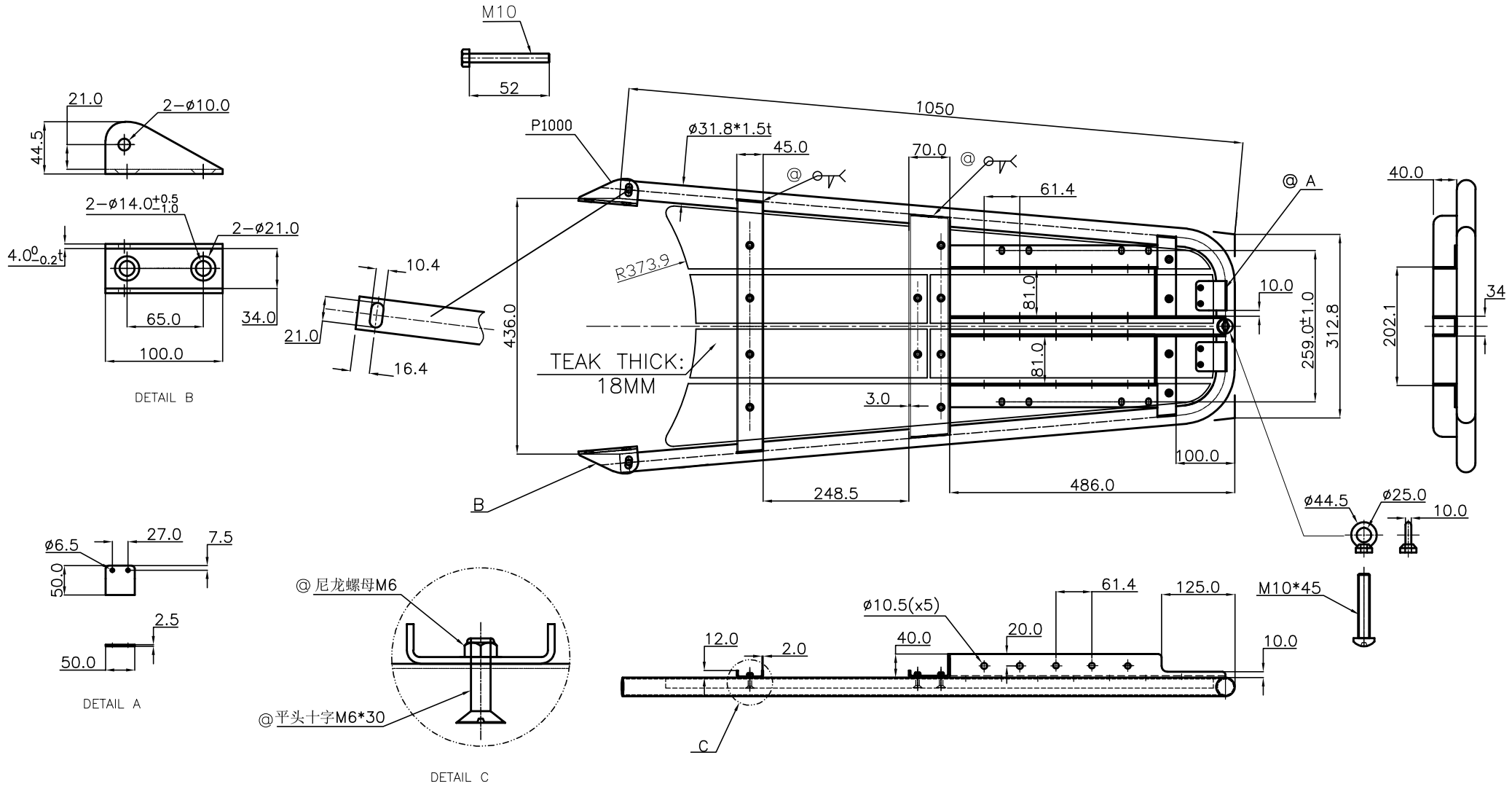

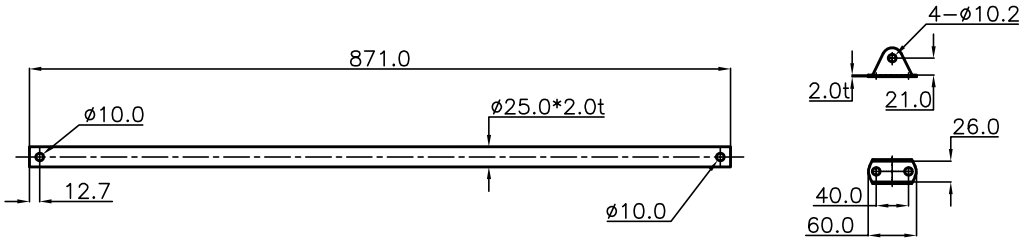

Unless otherwise specified; tolerances are:
1. Wall Thickness = ±5%
2. Angles = ±2°
3. Profile dimensions fit : ISO JS13

★ INDICATES "CRITICAL TO QUALITY" DIMENSION

REMOVE BURRS AND SHARP CORNERS 0.10-0.25

Drawn:	Date:			
Checked:	Date:	M'TL: SS 316	Scale:	DWG. NO.:
Approved:	Date:	Weight: g	Dimensions: M/M	
Projection:	A4H	Finish:	SHEET OF	Customer's No.: 48.472.01

Ecn	Revisions	Description	Date	Revised