Motormontage - 445-400-355 Sportsman
Engine assemble

445 Max - Catch

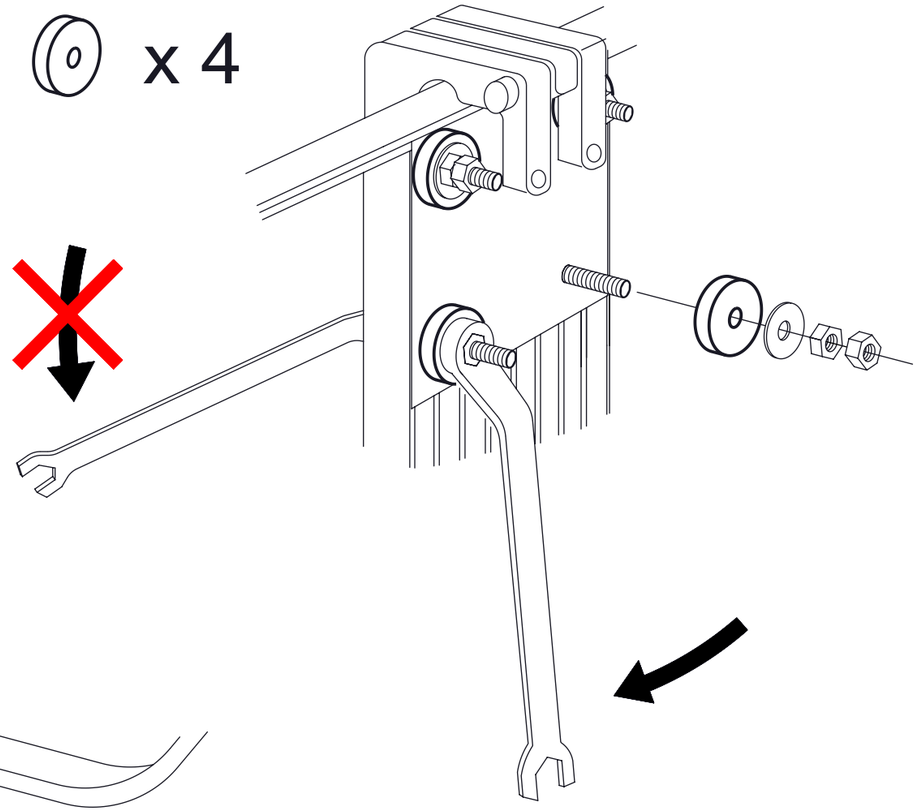

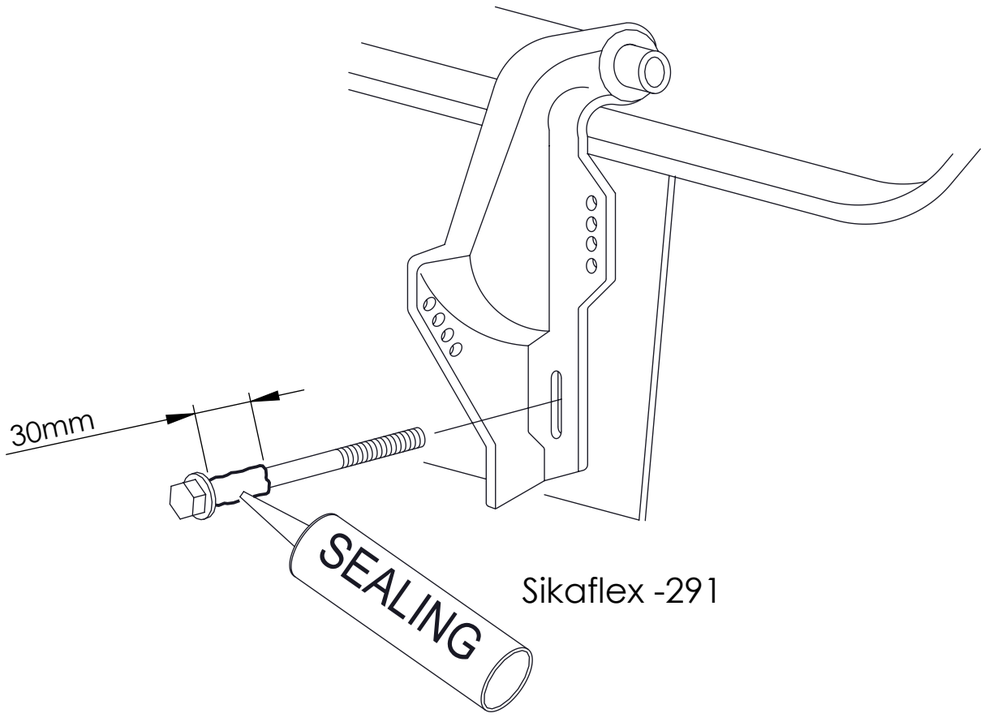

M12 - 70-80Nm
M10 - 40-50Nm
M8 - 20-30 Nm
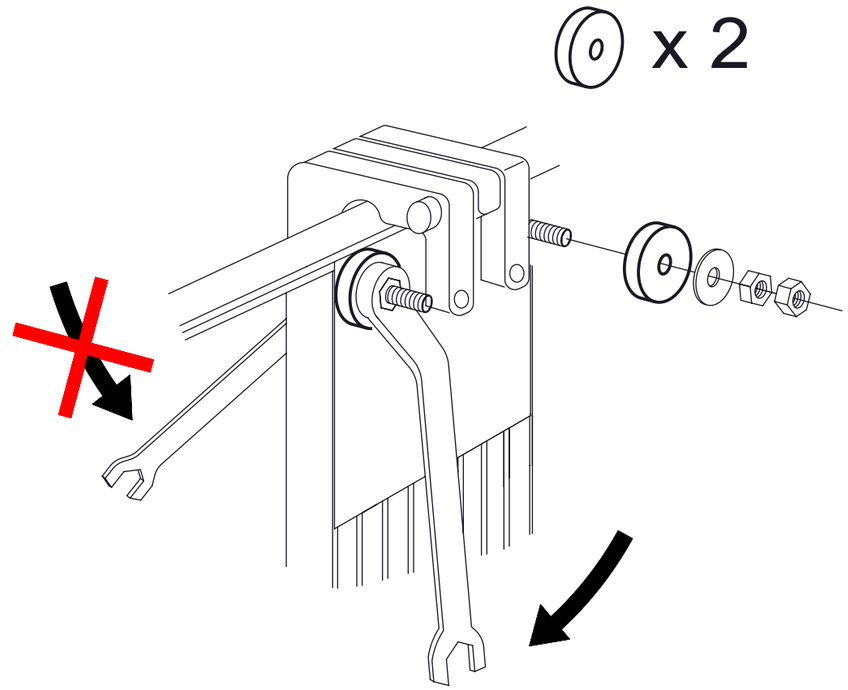
445 Basic
355-400 Sportsman