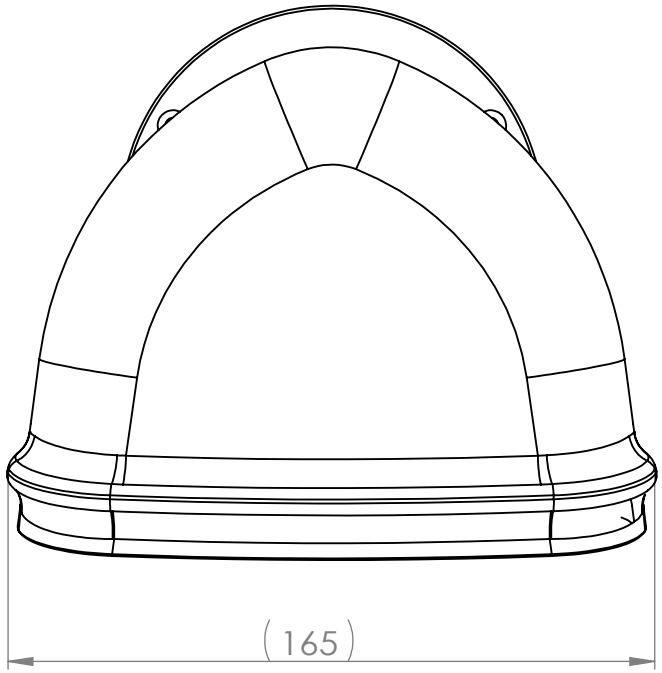

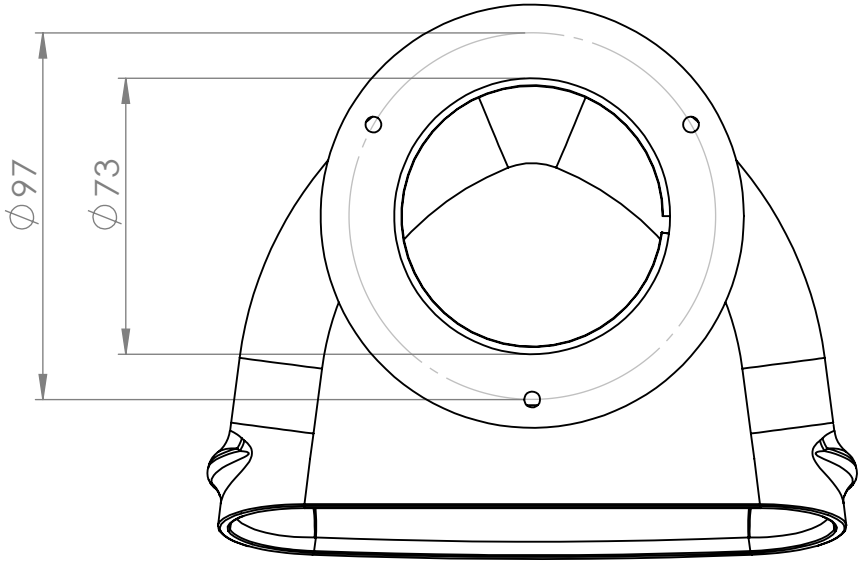

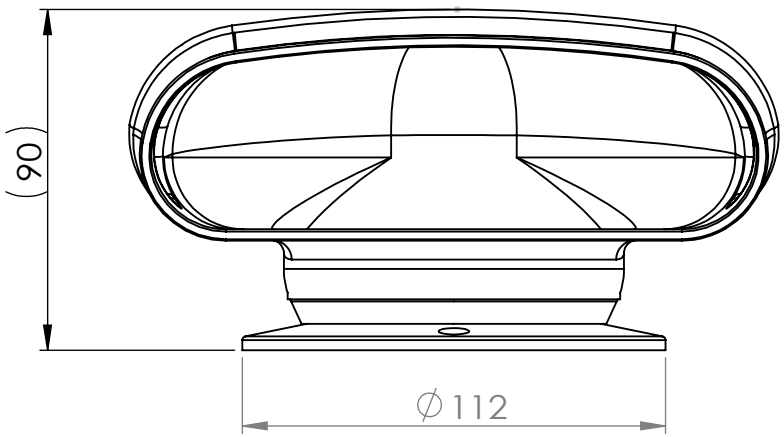

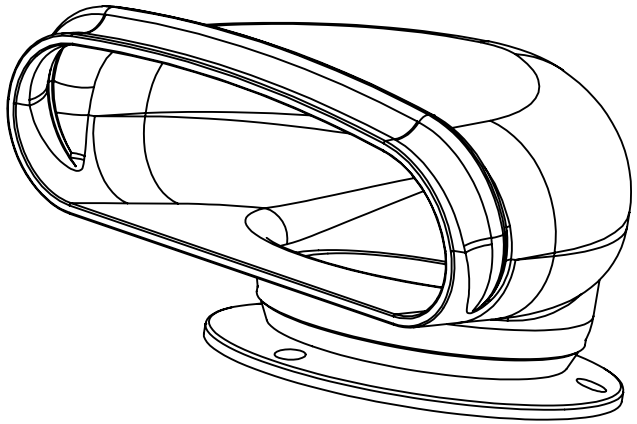

SIZE **A4**	DO NOT SCALE DRAWING	SCALE 1:2	MATERIAL :
			DWG NAME :